November 1st 2022

Introduction to Liquefied Petroleum Gas & LPG Carriers

Contents

Overview of the Carriage of Liquefied Gases by Sea

A liquefied gas is the liquid form of a substance that would be a gas if it were at ambient temperature and at atmospheric pressure.

Most liquefied gases are hydrocarbons and the key property that makes hydrocarbons the world's primary energy source, combustibility, also makes them inherently hazardous. Because these gases are handled in large quantities it is considered imperative that all practical steps are taken to manage risk and, to avoid loss of containment and limit all sources of ignition.

Gases are liquefied for transportation for volume efficiency purposes.
For example, one metric ton of liquefied natural gas (LNG) will occupy approximately 600 times less volume than one metric ton of natural gas in vapor form .

For liquefied petroleum gas (LPG), the ratio is one metric ton of liquefied product will occupy approximately 400 times less volume than one metric ton of petroleum gas in vapor form.

Overview of the Carriage of Liquefied Gases by Sea

- The International Maritime Organization (IMO) for the purposes of its Gas Carrier Codes, has adopted the following definition for liquefied gases carried by sea:
- Liquids with a vapor pressure exceeding 0.28 MPa / 2.8 bar at a temperature of 37.8°C
- The most important property of a liquefied gas, in relation to pumping and storage, is its saturated vapor pressure (SVP). This is the absolute pressure exerted when a liquid is in equilibrium with its own vapor at a given temperature.
- A characteristic of a liquefied gas that is often provided is the temperature at which the SVP is equal to atmospheric pressure. This is the liquid's atmospheric boiling point.

The Principal Products

- IMO divides liquefied gases into the following groups:
- LPG - Liquefied Petroleum Gas
- LNG - Liquefied Natural Gas
- LEG - Liquefied Ethylene Gas
- NH3 - Ammonia
- Cl2 - Chlorine
- Chemical gases.

The Principal Products

- The IMO gas carrier code define liquefied gases as gases with vapour pressure higher than 2,8 bar with temperature of 37,8 C.
- IMO gas code chapter 19 defines which products that are liquefied gases and have to be transported with gas carriers. Some products have vapour pressure less than 2,8 bar at 37,8C, but are defined as liquefied gases and have to be transported according to chapter 19 in IMO gas code.
- Propylene oxide and ethylene oxides are defined as liquefied gases. Ethylene oxide has a vapor pressure at 37,8C on 2,7 bar. To control temperature on ethylene oxide we must utilize indirect cargo cooling plants.
- Products not calculated as condensed gas, but still must be transported on gas carriers, are specified in IMO's gas code and IMO's chemical code. The reason for transportation of non-condensed gases on gas carriers is that the products must have temperature control during transport because reactions from too high temperature can occur.
- Condensed gases are transported on gas carriers either by atmospheric pressure (fully cooled) less than 0,7 bars, intermediate pressure (temperature controlled) 0,5 bars to 11 bars, or by full pressure (surrounding temperature) larger than 11 bars. It is the strength and construction of the cargo tank that is conclusive to what over pressure the gas can be transported.

The Principal Products

Examples of some gas pressure at 37,8°C and boiling point at atmospheric pressure:

Condensed gas	Gas pressure at 37,8°C bars absolute	Boiling point at atmospheric pressure in °C
Methane CH_4	Gas	- 161
Propane C_3H_8	12,9	- 43
n - Butane C_4H_{10}	3,6	- 0,5
Ammonia NH_3	14,7	- 33
Vinyl Chloride C_2H_3Cl	5,7	- 14
Butadiene C_4H_6	4,0	- 5
Ethylene oxide C_2H_4O	2,7	10,7

The Principal Products - LPG

- LPG - Liquefied Petroleum Gas is a definition of gases produced by wet gas or raw oil.
- The LPG gases are taken out of the raw oil during refining, or from natural gas separation. LPG gases are defined as propane, butane and a mixture of these. Large atmospheric pressure gas carriers carry most of the LPG transported at sea. However, some LPG is transported with intermediate pressure gas carriers. Fully pressurised gas carriers mainly handle coastal trade. LPG can be cooled with water, and most LPG carriers have direct cargo cooling plants that condenses the gas against water.
- LPG Cargo Trades / Main Routes
    - Persian Gulf to Far East (Japan, China and Korea).
    - Persian Gulf to India
    - USA to Far East (Japan, China and Korea)
    - USA to North-West Europe and Mediterranean
- LPG is utilized for energy purposes and in the petro-chemical industry

The Principal Products - LNG

- LNG - Liquefied Natural Gas is a gas that is naturally in the earth.
- Mainly LNG contains Methane, but also contains Ethane, Propane, Butane etc.
- About 95% of all

LNG are transported in pipelines from the gas fields to shore, for example, gas pipes from the oil fields in the North Sea and down to Italy and Spain.

- Gas carriers transport the remaining 5%. When LNG is transported on gas carriers, the ROB and boil off from the cargo is utilized as fuel for propulsion of the vessel.
- Cargo cooling plants for large LNG carriers are very large and expensive, and they will use a lot of energy.
- Small LNG carriers have cargo-cooling plants and can also be utilized for LPG transportation.
- The sea transport of LNG is from the Persian Gulf and Indonesia to Japan, Korea and from the Mediterranean to Northwest Europe and the East Coast of USA and from Alaska to the Far East.
- LNG is used for energy purposes and in the petro-chemical industry.

The Principal Products - LEG

- LEG - Liquefied Ethylene Gas. This gas is not a natural product, but is produced by cracked wet gas, such as, Ethane, Propane, and Butane or from Naphtha. Ethylene has a boiling point at atmospheric pressure of -103,8oC, and therefore has been transported in gas carriers equipped with cargo compartment that can bear such a low temperature. Cascade plants are used to condense Ethylene. As critical temperature of Ethylene is 9,7C one can not utilize water to condense Ethylene.
- The definition of Ethylene tankers is LPG/LEG carrier.
- Ethylene is very flammable and has a flammable limit from 2,5% to 34% by volume mixed with air. There are stringent demands regarding the oxygen content in Ethylene. The volume of ethylene must be less than 2% in the gas mixture to keep the mixture below the LEL “lower explosion limit”. Normally, there are demands for less than 0,2% oxygen in the gas mixture in order to prevent pollution of the cargo.
- Ethylene is utilized as raw material for plastic and synthetic fibers.
- Ethylene is transported from the Persian Gulf to the East, the Mediterranean to the East and Europe, the Caribbean to South America. There is also transport of Ethylene between the countries Malaysia, Indonesia and Korea.

The Principal Products - AMMONIA

- Ammonia (NH3), is produced by combustion of hydrogen and nitrogen under large pressure.
- Ammonia is a poisonous and irritating gas, it has Threshold Limit Values (TLV) of 25 ppm and the odor threshold is on 20 ppm. It responds to water and there are special rules for vessels that transport Ammonia. IMO Gas Code, chapters 14, 17 and 19.
- When ammonia gas is mixed with water, a decreased pressure is formed by 1 volume part water absorbing 200 volume parts ammonia vapor. A decreased tank pressure will occur if there is water in the tank when commence loading ammonia and the tank hatch is closed. With an open hatch, we can replace the volume, originally taken up by the ammonia gas, with air.
- Ammonia shouldn't be mixed with alloys: copper, aluminum, zinc, nor galvanized surfaces. Inert gas that contains carbon dioxide must not be used to purge ammonia, as these results in a carbamate formation with the ammonia. Ammonium carbamate is a powder and can blockage lines, valves and other equipment.

The Principal Products – AMMONIA Conti'd

- The boiling point for ammonia at atmospheric pressure is –33C° and must be transported at a temperature colder than –20C°. One can cool ammonia with all types of cargo cooling plants. Ammonia is transported with atmospheric pressure gas carriers or semi-pressurised gas carriers.
- Gas carriers carrying Ammonia must be constructed and certified in accordance with IMO's IGC code for transportation of liquefied gases. The definition for ammonia tanker is LPG/NH3, carrier.
- Ammonia is utilized as raw material for the fertilizer industry, plastic, explosives, colors and detergents.
- There is a lot of transportation from the Black Sea to USA, from USA to South Africa and from Venezuela to Chile.

The Principal Products – Chlorine CL2

- Chlorine is a very toxic gas that can be produced by the dissolution of sodium chloride in electrolysis.
- Because of the toxicity of Chlorine it is therefore transported in small quantities and must not be transported in a larger quantity than 1200m3.
- The gas carrier carrying chlorine must be type 1G with independent type C tanks.
- That means the cargo tank must, at the least, lie B/5 “Breadth/5” up to 11,5 meter from the ships side.
- To transport Chlorine, the requirements of IMO IGC code, chapters 14, 17 and 19 must be fulfilled.
- Cooling of Chlorine requires indirect cargo cooling plants.
- The difference of Chlorine and other gases transported is that Chlorine is not flammable.
- Chlorine is utilized in producing chemicals and as bleaching agent in the cellulose industry.

The Principal products – Chemical Gases

- The chemical gases mentioned here are the gases produced chemically and are defined in IMO's rules as condensed gases.
- Because of the gases' boiling point at atmospheric pressure and special requirements for temperature control, these gases must be carried on gas carriers as specified by the IMO gas code.
- Condensed gases are liquids with a vapor pressure above 2,8 bars at 37,8oC.
- Chemical gases that are mostly transported are Ethylene, Propylene, butadiene and VCM.
- Chemical gases that have to be transported by gas carriers are those mentioned in chapter 19 in IMO IGC code.
- There are, at all times, stringent demands for low oxygen content in the cargo tank atmosphere, often below 0,2% by volume.
- This involves that we have to use nitrogen to purge out air from the cargo compartment before loading those products.
- In addition, even though the vapor pressure does not exceed 2,8 bars at 37,8oC such as, ethylene oxide and propylene oxide or a mixture of these, they are still in the IMO gas code as condensed gases.

The Principal products – Chemical Gases

- Gas carriers that are allowed to transport ethylene oxide or propylene oxide must be specially certified for this. Ethylene oxide and propylene oxide have a boiling point at atmospheric pressure of respectively

11C and 34C and are therefore difficult to transport on tankers without indirect cargo cooling plants.

- Ethylene oxide and propylene oxide can not be exposed to high temperature and can therefore not be compressed in a direct cargo cooling plant.
- Ethylene oxide must be transported on gas tanker type 1G.
- Chemical gases like propylene, butadiene and VCM are transported with medium sized atmospheric pressure tankers from 12000 m3 to 56000 m3.
- Semi-pressurized gas carriers are also used in chemical gas trade and then in smaller quantity as from 2500 m3 to 15000 m3.
- Chemical gases are transported all over the world, and especially to the Far East where there is a large growth in the petro-chemical industry.
- Chemical gases are mainly utilized in the petro-chemical industry and rubber production.

Types of Gas Carriers

- Gas carriers are tankers constructed for transporting liquefied gases in bulk.
- IMO defines liquefied gases as products with a vapor pressure exceeding 2,8 bar absolute at a temperature of 37,8C°.
- Gas carriers are built according to IMO's Gas Codes. There are three versions of gas codes; the first deals with existing gas carriers and passes for gas carriers delivered before 31st of December 1976.
- The next code passes for gas carriers delivered on or after 31st of December 1976, but before 1st of July 1986.
- The third gas code, IGC Code passes for gas carriers started or the keel set after the first of July 1986.
- The IGC Code has been amended several times. It is, therefore, important to understand which version of the Code applies to a specific vessel.
- The most recent version of the IGC Code, the 2016 Edition, incorporated changes that reflected significant developments in the gas carrier industry.

Types of Gas Carriers

- The gas code has a content in demands for damage stability, gas tankers cargo handling equipment, cargo tanks, steel qualities in cargo tanks, pipe systems for cargo handling, personnel protection, safety valves, etc.
- Gas carriers are divided into three main groups and four types.
- The gas carrier owner decides which group and type the carrier should have, according to the freight the vessel will trade.

The three main groups are:

- Fully-pressurized carriers
- Semi-pressurized carriers
- Fully refrigerated carriers

Types of Gas Carriers

- Fully pressurised carriers: designed for excess pressure in the cargo tank above 11 bar.
- Semi-pressurised carriers: designed for excess pressure the cargo tank on 0,5 – 11 bars, the pressure is normally 3 – 5 bars.
- Fully refrigerated carriers: designed for excess pressure in the cargo tank below 0,7 bars, the pressure is normally 0,25 – 0,3 bars.
- Each of the groups is again divided into ship types dependent on the cargo's hazardous properties (i.e.: toxicity, flammability, reactivity etc.). It is the ship owner's specification of the gas carrier, the international rules determined by IMO, national rules and class companies' rules that decide to which group and ship type the carrier belongs.
- All gas carriers classed according to IMO IGC Code for transportation of gases mentioned in chapter 19, is given one of the following description types: 1G, 2G, 2PG or 3G.
- Ship type 1G is the type that can carry all cargoes mentioned in chapter 19 of the IGC Code and has the largest rate of security to avoid pollution of the environment.

Types of Gas Carriers

- Ship type 1G is a gas carrier that can carry all products mentioned in chapter 19 in the IGC Code and requires largest rate of security to prevent leakage from the product to the surroundings.
- Ship type 2G is a gas carrier that can carry the products marked in 2G, 2PG and 3G in chapter 19 in the IGC Code, and that requires defensible security to prevent leakage of the product.
- Ship type 2PG is a gas carrier of 150 meters or less that can carry the products marked 2PG or 3G in chapter 19 in the IGC Code, and that requires defensible security to prevent leakage of the product.

Also, where the product is transported in independent tanks type C, which are designed for MARVS of at least 7 bars. Then, the cargo tank system is calculated for temperatures of –55C° or warmer. Gas tankers of 150 meters or more, but with the same specification, as 2PG ships must be calculated as 2G ships.

- Ship type 3G is a gas carrier that can carry the products marked 3G in chapter 19 in the IGC Code, and that requires moderate security to prevent leakage of the product. The ship type is reported in column c in chapter 19 in the IGC Code.

Types of Gas Carriers

- The type of gas carrier is specified in the vessels IMO Certificate of Fitness. On the certificate, there is also a product list of which products the vessel can carry.
- The type description of the gas carrier is given by the year when the keel was laid and the cargo tanks distance from ship side, damage stability, floating capability and of what material the cargo tank is made.
- As an example, on ship type 1G, the cargo tank must lie at least B/5 parts up to 11,5 meters from the ship side. From the bottom plate and up to the tank no less than 2 meters or B/15 parts. B is equal to the vessel breadth.
- This type of carrier must tolerate any damage to the ship side along the whole ship's length. All information of the demands made for the different ship types is located in IMO Gas Code, and all gas tankers must have this publication onboard.

Types of Gas Carriers – Fully Pressurised

- Fully pressurised gas carriers were the first generation of gas carriers that were built to transport liquefied gases in bulk. This type of gas carrier trades mostly where LPG is consumed as energy, such as house heating and cooking etc. The trade area is often limited to near coastal waters. This type of gas carrier is still built, but is built to be more modern with discharging pumps in cargo tanks and indirect cargo cooling plant for more flexible cargo handling. We divide this type of gas carrier into two, one for LPG trade and one for Chlorine trade.

FULLY PRESSURISED LPG CARRIER

- This type of gas carrier is the type that in proportion to displacement can carry the lowest weight of cargo, this because it is transported under pressure at the surrounding temperature, “ambient”. When the tank pressure increases the cargo’s temperature also increases and the density of the liquid will be lower.
- The cargo tank construction itself is heavy as these are built of common ship steel with a thick tank shell to endure high pressure. There are no requirements for insulation of the cargo tanks because these carriers are not allowed to transport cargoes with temperature colder than –10C.
- Majority of these gas carriers are built in sizes up to about 5000 m3, although others may be from 6000m3 to 11000 m3, and are built for an excess pressure corresponding to an ambient temperature of 45C. Propane has a saturation pressure of 17,18 bars at 50C.
- IMO has a requirement when building fully pressurised tanks that they must be able to bear ambient (surroundings temperature) cargo with a temperature on 45C.
- The type of cargo determines the excess pressure for which the tanks must be built. Normally, fully pressurised carriers LPG have a relief valve setting at 18 bars, consequently, they can also carry propylene in tropical waters.

FULLY PRESSURISED LPG CARRIER

- This type of gas carrier is easy to operate, because the cargo does not need to be cooled down on the sea voyage.
- To prevent vapor into the atmosphere when loading, they can remove the excess vapor by having vapor return to shore.
- Fully pressurized gas carriers don't need discharge pumps in the cargo tanks, because the excess tank pressure will discharge the liquid to shore.
- Hot gas from shore can be used to hold the excess pressure in the cargo tank.
- If there is no utilization of the discharging pumps while discharging, the cargo tank's excess pressure must at all time be higher than the shore backpressure.
- Some fully pressurized gas carriers are equipped with booster pump(s) (auxiliary pump) on deck.
- This pump is used to discharge against a higher pressure than the excess pressure in the cargo tanks.
- Booster pump is a one-stage centrifugal pump installed on deck close to the ship manifold.

FULLY PRESSURISED LPG CARRIER

- Normally a booster pump manages to increase the pressure up 9 bars.
- If the cargo tank's pressure is 7 bars, then we can manage 16 bars on the discharge line with the booster pump.
- We must bear in mind that when running the booster pump against maximum pressure, the flow through the pump is very low.
- We must always prime the booster pump before starting it, generally by draining the discharge line to the ventilation mast.
- It is the pressure in the shorelines that determines the manifold's pressure and whether we should use the booster pump or not.

FULLY PRESSURISED LPG CARRIER

- Fully pressurized gas carriers are equipped with a heat exchanger (cargo heater) connected to the loading lines with vales and spool piece (adapter).
- When the heat exchanger is not in use it is segregated from the liquid line.
- The heat exchanger is used when we are loading a cargo with temperature below 0oC, for example, propane at atmospheric pressure corresponding to –42,8oC directly into the vessels cargo tanks.
- Then the cargo has to be heated to above –10oC before we load it down to the cargo tank.
- Fully pressurized gas carriers have a small cargo compressor to produce excess pressure in the cargo tanks or remove over pressure from the cargo tanks.
- Vapor is sucked from the cargo tanks to the compressor, and hot vapor is returned back to the cargo tanks.

FULLY PRESSURISED LPG CARRIER

- These compressors are in general small and are utilized only for holding the temperature on the cargo.
- Fully pressurized gas carriers are constructed with independent tank type C, cylindrical or spherical tanks.
- These are tanks installed on “cradle-like” supports down in the hold space (the space around the cargo tank), and the ship hull doesn’t recover dynamic loads from the cargo tanks.
- Actual cargo for fully pressurized carriers is LPG and some chemical gases.
- The kind of cargo each vessel can carry is stated in the vessel’s IMO Certificate of Fitness.
- Fully pressurized gas carriers are most utilized for carrying of ambient LPG and some chemical gases as propylene, mainly in the Far East, South America, the Caribbean and The Mediterranean.

FULLY PRESSURISED LPG CARRIER

Advantages:

- Easy to operate because all discharging takes place without pumps.
- Low costs in building because common steel is utilised in the cargo tanks.
- Low costs for maintenance, because there is little mechanical utility equipment for cargo handling.
- Simple discharging/loading equipment on deck.
- No insulation of tanks or liner, no need in maintenance of the insulation, and one can easily inspect the cargo tanks and the lines from the outside.
- Transporting the cargo by surrounding temperature (ambient), no cooling of the cargo gives low energy consumption.

FULLY PRESSURISED LPG CARRIER

Disadvantages:

- Small amount of cargo in proportion to displacement as the cargo is transported ambient.
- Limited trade area because of dependence of discharging to pressure tanks on shore.
- Limited cargo volume because the tankers are not built large than 3000m3.
- Unable to have cold cargo in the tanks because of the steel quality.
- Heavy cargo construction because of toleration of the pressure.

FULLY PRESSURISED CHLORIDE CL2 CARRIER

- These tankers are built as fully pressurized tankers LPG, but because of the toxicity of chlorine, special requirements are set on this type of gas carrier. The requirements are stated in the IGC code chapter 14, 17 and19.
- This type of ship must not have cargo tanks larger than 600 m3, and total capacity must not exceed 1200 m3.
- Consequently, these gas carriers are smaller than the common fully pressurized gas carriers LPG. The cargo tanks must be built for an excess pressure not lower than 13,5 bars, which is saturation pressure for Chlorine at 45C.
- Tanks and lines must be built in steel quality that tolerates a temperature down to –40C. Cargo lines must at maximum have an inner diameter of 100 mm. Tanks and lines must be insulated. Polyurethane or polystyrene is utilized as insulation.

FULLY PRESSURISED CHLORIDE CL2 CARRIER

- This information is at all times specified in IMO Certificate of Fitness.
- There is also a summary in the certificate of fitness as to what type of cargoes the actual tanker is allowed to carry.
- This type of gas carrier often has an indirect cargo cooling plant with coils welded to the outside of the tank shell.
- In general ethanol is used as cooling medium against Freon (R22) in a small freon cooling plant.
- Other indirect cargo cooling plants utilize freon as the cooling medium by directly pumping freon in and around the coils.
- It is prohibited to use any kind of direct cargo cooling plant on chlorine.

FULLY PRESSURISED CHLORIDE CL2 CARRIER

- To discharge these type of gas carriers the cargo tanks excess pressure is used. Either the pressure established by dry nitrogen or only the tank pressure is used.
- Chlorine vapor obtained from shore via the ship's vapor lines can also be used for discharging. Some chlorine carriers are also equipped with submerged pumps in the cargo tanks.
- This type of gas carrier mostly stays in the chlorine trade, because of the toxicity of the cargo. There are few cargo owners that accept to load other products after Chlorine.
- Chlorine carriers can, if they are accepted, also carry LPG and some chemical gases depending on the relief valve's set point.

FULLY PRESSURISED CHLORIDE CL2 CARRIER

- Because of the toxicity of chlorine, it is necessary that the chlorine carriers are equipped with a chlorine absorption plant connected to cargo tanks and cargo lines.
- The absorption plant must neutralize a minimum 2% of total cargo capacity. The gas detector onboard must measure 1 ppm chlorine and alarm setting at 5 ppm.
- The gas detector must scan the bottom of hold space, line from safety valve, the outlet from chlorine absorption plant, into ventilation for accommodations and all of the gas area on deck.

FULLY PRESSURISED CHLORIDE CL2 CARRIER

Advantages:

They are easy to operate.

Simple cargo handling equipment on deck.

Tanks and lines are insulated.

They have an indirect cooling plant and are thereby capable to cool cargo.

Disadvantages:

They are small tankers and have thereby low loading capacity.

Expensive to build in proportion to the cargo amount they can transport.

The tankers are mainly designed for Chlorine.

SEMI PRESSURISED GAS CARRIER

- Semi-Pressurised gas carriers are a development from fully pressurised carriers. Semi-pressurised carriers are equipped with discharging pumps in the cargo tank, cargo cooling plant, heat exchanger (cargo heater) and booster pumps.
- In addition, the tanks and lines are insulated, normally with polyurethane or polystyrene. This renders the ship type with more flexibility than other gas carrier types.
- Semi- pressurized tankers are divided in two types - Semi-pressurised carrier LPG/LEG and Semi-pressurised tanker combined gas and chemicals.
- Semi-pressurised carriers are more complex than fully pressurised carriers due to their extended cargo handling equipment.
- Semi pressurised tankers are equipped either with direct cargo cooling plant or cascade cargo cooling plant.

SEMI PRESSURISED GAS CARRIER

- Which type of cargo cooling system the gas carrier is equipped with depends on the type of cargo it is meant to carry.
- If the tanker is carrying LPG or Ammonia with a boiling point at atmospheric pressure warmer than –48C, the choice is generally direct cargo-cooling plant.
- If the vessel will transport cargo with a boiling point at atmospheric pressure colder than –48C, the vessel must be equipped with cascade cooling plant.
- Before loading cold cargo, the cargo tank steel must be cooled down to approximate 10C above cargo temperature. It is common that the first 30C can be cooled the first hour.
- Thereby we can cool down the shell by 10C an hour until it is about 10C above the cargo temperature.
- The cooling of the tank steel must be done to prevent thermal expansion and crack in the tank shell. A tank of 1000 m3 that is cooled from 20C to –103C shrinks about 5 m3.

SEMI PRESSURISED GAS CARRIER

- In addition, when the shell is cooled down, the time for loading will be reduced and thereby reduces the time ashore.
- That will save harbour expenses for the ship owners or the charterer. It is specified in the operating manual for each vessel how to cool down the cargo tank shell.
- We must be attentive to this, because uneven thermal shrinkage of the cargo tank can lead to damage to the cargo tank. Semi-pressurised gas carriers are normally built in sizes from 2000 m3 to 15000 m3.
- They are designed to carry cargo with temperatures down to –48C for LPG and Ammonia, and –104C for LEG.
- Semi-pressurised gas carriers are utilised for transportation of petrochemical gases, such as, Propylene, Butadiene, Ethylene and Ammonia, but also for gases, such as, Propane, Butane and Ethane.

SEMI PRESSURISED GAS CARRIER

- There have been plans to build semi-pressurized tankers up to 36000 m3, but they are still not built.
- Semi-pressurized gas carriers have independent tanks type C either as cylinder or spherical tank designed for tank pressure between 0,5 – 11 bars.
- Either nickel steel or coal-manganese steel is used in the cargo tanks. Semi-pressurized carriers with spherical tanks utilize the same steel quality as in cylinder tanks.
- The cylinder tanks are often a combination of twin tanks that are situated longitudinally of the ship, and a single situated abeam.
- The tanks are placed below deck, but some vessels also have cargo tanks on deck.
- This information is, at all times, specified in IMO Certificate of Fitness. In the IMO Certificate of Fitness, there is also a summary of cargo the vessel can carry.

SEMI PRESSURISED GAS CARRIER

- The tanks are placed in “cradle-like” constructions and are welded to one of the cradles; the other cradle then functions as cargo tank support by expansion of the tank.
- The tanks are either strapped down with steel bands or the brackets are welded on to prevent the tanks from floating up.
- Between the cradle and the tank shell there is a layer of hard wood that acts as a fender to prevent damage to the cargo tank against the cradle, and acts as insulation against the steel in the cradle.
- On some vessels, the cargo tanks are attached to one of the cradles, and free in the other cradle for free expansion of the cargo tank.
- The spherical tanks are also installed in a “cradle-like” construction, and brackets (anti float) are welded on top of the cargo tank to prevent the cargo tanks from floating up.
- The support goes towards a bracket in the hull of the tanker, either up under deck or in the ship side. Actual cargoes for Semi-pressurized gas carriers are LPG, LEG, Ammonia, Ethylene and some chemical gases.

SEMI PRESSURISED GAS CARRIER

- Semi-pressurized gas carriers are the type of gas carriers that is most flexible for change of cargo and cargo handling.
- Semi-pressurized tankers with deck cargo tank or some transverse cargo tanks can have stability problems in loading/discharging.
- This is specified in the operating manual and the stability book for the tanker, and the operators onboard must consider this.

SEMI PRESSURISED GAS CARRIER

Advantages:

- Very flexible, can load and unload temperate cargo.
- Can heat the cargo while at sea and while discharging.
- Can transport fully cooled cargo, and thereby handle heavier cargo, lower temperature, and larger density. (Notice the safety valves set point).
- Easier tank construction than fully pressurized tankers.
- Can cool the cargo on route, no dependence at loading to remove excess pressure.

Disadvantages:

- Expensive to build, costly cargo handling equipment.
- Complicated to operate because of the cargo handling equipment.
- Uses more energy than fully pressurized tankers.
- Limited cargo amount (maximum approximate15000 m3).

SEMI PRESSURISED TANKERS (COMBINED GAS / CHEMICAL)

- These gas carriers are constructed like other Semi pressurized tankers, but they are classified both according to IMO gas and chemical codes.
- This involves separate liquid and vapor lines from each tank to the manifold, in order to segregate all cargo tanks from each other.
- This means that this type of gas carriers can load equally as much different cargo as they have cargo tanks.
- The cargo tanks on this type of gas carrier are the independent type C cylinder, generally single transverse or small alongside twin tanks.
- Cargo tanks, lines, and valves are constructed in stainless steel, and these gas carriers are equipped with indirect cargo cooling plant in addition to cascade cargo cooling plant.
- They are constructed to transport cargo from –104C to 60C. The indirect cargo cooling plant is often equipped with a coil welded outside the tank shell, where Ethanol is used either to cool or heat the tank steel.

SEMI PRESSURISED TANKERS (COMBINED GAS / CHEMICAL)

- When cooling the tank steel, the Ethanol is cooled with the help of freon (R22) cooling plant.
- The Ethanol is also utilized to heat the tank steel; it is then heated with the tanker steam in a heat exchanger and pumped in and around the coils.
- These gas carriers are normally designed for 3 - 4 bars excess pressure and are built in sizes from 4000 m3 up to 15000 m3. Actual cargo LPG / NH3 / LEG / chemical gases and chemicals.

SEMI PRESSURISED TANKERS (COMBINED GAS / CHEMICAL)

Advantages:

- The tankers are very flexible, can transport both chemicals and gas.
- Tanks and lines are stainless steel.
- Direct and indirect cooling/heating.
- Can load and discharge tempered cargo and fully cooled cargo down to -104C.
- Access to many smaller ports/harbors because of relatively little draught.

Disadvantages:

- Expensive to build.
- Demanding to operate because of complicated cargo handling equipment.
- Limited cargo volume because of the tanker's size.
- The stability is a problem when loading/unloading when there are many transverse cargo tanks or deck cargo tanks. This is specified in the operational manual and the stability book.

FULLY REFRIGERATED CARRIERS

- Following semi-pressurized gas carriers, the first atmospheric pressure gas carrier was delivered at the end of the 1950s.
- These gas carriers are built in sizes from 15000 m3 to 120000 m3 and are designed for excess tank pressure less than 0,7 bars.
- These gas carriers are built either with independent tank type A or type B as prismatic or spherical tanks, or with membrane tanks.
- With prismatic or membrane tanks the volume of the hull is utilized, and tank construction is below deck.
- With spherical tanks, about half of the cargo tank is above deck because the vessel's hull is lower than what you find with prismatic or membrane tanks.
- The cargo tanks on f**ully refrigerated LPG carriers** are normally built of low temperature carbon-manganese steel.

FULLY REFRIGERATED CARRIERS

- The cargo tanks are designed for LPG, Ammonia and some chemical gases with minimum temperature of –48C.
- The cargo tanks are normally insulated either with Polyurethane or Polystyrene. Some of the older fully refrigerated gas carriers have Perlite as tank insulation.
- Fully refrigerated gas carriers are normally equipped with independent type A or B prismatic cargo tank or membrane tanks.
- Fully refrigerated carriers with independent tank type A must have a full secondary barrier.
- This is achieved by using low temperature steel in the hull structure around the cargo tank.
- If independent tank type B is utilized either prismatic or spherical tanks, only a partly secondary barrier is demanded.
- This is achieved by utilizing low temperature steel in the hull under the cargo tank.

FULLY REFRIGERATED CARRIERS

- Independent prismatic cargo tanks are normally divided into two in longitudinal direction with a center bulkhead that runs to the top of the tank dome.
- The center bulkhead is built to improve the stability on the carriers by reducing the effect of the free liquid surface when the tanks are loaded.
- There are normally one or more valves in the center bulkhead that is called intermediate valves.
- These Intermediate valves are installed down in the pump sump for the liquid to flow from one side to the other.
- It is important that the intermediate valves are closed when there is no loading or discharging of cargo.
- Normally there are two pumps in each cargo tank.
- With the intermediate valves open, one can discharge the entire cargo tank with one pump.
- Fully refrigerated carriers with membrane tanks are without a center bulkhead.

FULLY REFRIGERATED CARRIERS

- Such gas carriers are built with a trunk on deck that the membrane tank is formed out of, and thereby reduces the effect of the free liquid surface.
- Fully refrigerated carriers are generally equipped with the same cargo handling equipment as Semi-pressurized carriers.
- Some carriers also have coils in the pump sump that is used for liquid free the tank, hot gas is blown through the coils.
- Some carriers are also equipped with strip lines in the tank that either are connected to ejectors or transportable membrane pumps, this is utilized when loading naphtha etc.
- Some atmospheric pressure tankers do not have booster pumps or heat exchangers (cargo heaters).

FULLY REFRIGERATED CARRIERS

- Actual cargo for this type of gas carrier is LPG, Ammonia, Naphtha, and some chemical gases, such as, Propylene, Butadiene and VCM. Information of the type of cargo the tanker transports is located in IMO Certificate of Fitness.
- When atmospheric pressure gas carrier are carrying flammable products, the hold space or the inter-barrier space must have a content of neutral atmosphere with either dry inert gas or dry nitrogen.
- When carrying non-flammable products, one utilizes dry air or dry nitrogen on the hold space.
- This gas carrier type carries a lot of LPG from the Persian Gulf to the Far East and USA. Ammonia is transported from The Black Sea to USA and the Far East.

FULLY REFRIGERATED CARRIERS

Advantages:

- Transports large weight in proportion to volume because the cargo is at all times loaded and transported at atmospheric pressure.
- Easier cargo tank construction than Semi pressurized tanker
- Tanks and lines are insulated.
- Have large cargo cooling plant.
- Large tankers are more efficient (cargo weight).

Disadvantages:

- Not so flexible for cargo change as Semi pressurized tankers.
- Pressure limitation, not possible to heat up cargo on route.
- Carrier without heat exchanger (cargo heater) can only unload at atmospheric pressure (fully cooled).
- Limited access on terminals and ports with limitations to draught.

FULLY REFRIGERATED LNG CARRIERS

- These gas carriers are special as they are designed for loading gas at atmospheric pressure with a temperature down to –163C.
- Fully refrigerated LNG carriers are either built with independent tanks type B Moss-Rosenberg patent with spherical tanks or French patents that utilizes membrane tanks.
- Spherical tanks of Moss Rosenberg patent are built in aluminium.
- French patents with membrane tanks are built either in stainless steel, 9% nickel steel or ferro nickel steel that have a 36% nickel content.
- Common for all these steel types is that they have a thermal expansion coefficient close to 0. These gas carriers are built from 20000 m3 to 125000 m3.
- The largest LNG carriers are, at all times, contracted on basis of long cargo contracts over about 25 years.
- This is because these tankers are very expensive to build and are designed for LNG trade.
- The LNG tankers compete with gas transportation in pipelines on shore, and the sea transport amount to about 5% of the total LNG transport.
- These tankers are special in that the vapor boil off from the cargo is utilized as fuel to the vessels propulsion.

FULLY REFRIGERATED LNG CARRIERS

- For the large LNG tanker, the vapor boil off is between 0,18% to 0,25% of the cargo capacity per 24 hours.
- It is possible to produce cargo cooling plants for the large LNG tankers, but to cool 125000 m3 LNG about 6000 kW/h is required.
- This indicates that this is too expensive, and it is more appropriate to utilize the vapor boil off for propulsion.
- The smaller LNG tankers on the other hand have a cargo cooling plant, and they transport some in LPG/LNG/LEG trade.
- LNG carriers have a special procedure for cooling the cargo tanks before loading, which is specified in the tanker's operation manuals and certificates.
- The tankers are equipped with a spray plant where Methane is pumped into the tank's spray line (perforated lines), which is installed inside the cargo tank.
- Understandably, one must cool the cargo tanks a considerable amount of degrees to be ready to load.
- One must never begin to load a cargo tank before there is –136C in the middle of the tank, or by the tank's equator.

CARGO COMPARTMENT SYSTEMS

- Cargo compartment systems on gas carriers are divided into groups and types. The group division indicates how the cargo tanks transfer dynamic strength to the vessel hull.
- Cargo tanks that will be used on gas carriers must at all times have a documented strength and certification of welded joints and steel quality.
- The cargo tanks on gas carriers are rarely a direct part of the hull, but rather tanks installed into the hull and isolated from the hull.
- Gas carriers are built with two or more spaces where the cargo tanks are installed.
- The space where the cargo tank is installed is called hold space.
- How much hold space volume the cargo tank absorbs depends on the cargo tank's shape.
- Cargo tanks isolated from the hull, for example, cylinder tanks, must be electrically grounded with a wire or steel strip to the hull.

CARGO COMPARTMENT SYSTEMS

Table showing connection between cargo temperature and type of compartment and secondary barrier requirement:

Cargo temperature at atmospheric pressure	**- 10°C and above**	**Below -10°C down to –55oC**	**Below -55°C**
Basic tank type	No secondary barrier required	Hull may act as secondary barrier	Separate secondary barrier where required
Integral		Tank type not normally allowed	
Membrane		Complete secondary barrier	
Semi-membrane		Complete secondary barrier	
Independent			
Type A		Complete secondary barrier	
Type B		Partial secondary barrier	
Type C		No secondary barrier required	
Internal insulation			
Type 1		Complete secondary barrier	
Type 2		Complete secondary barrier is incorporated	

CARGO COMPARTMENT SYSTEMS

- Cargo tanks that are built for fully refrigerated gas carriers, and tanks with MARVS less than 0,7 bars, must at all times have full or partly secondary barrier.
- Secondary barrier is a tank or hull construction built outside the cargo tank itself, either in the insulation between cargo tank and hull, or in the hull around the cargo tank.
- If the hull around the cargo tank is used, it will be the ballast tank, ships side or cofferdams that is the secondary barrier.
- When utilizing the hull around the cargo tank as the secondary barrier the vessel is limited as it will not have the capability to transport cargo colder than –55C.
- Secondary barrier will prevent cargo liquid from any possible leaks coming from the cargo tank cooling the environment around the cargo tank, for example the ship sides.

CARGO COMPARTMENT SYSTEMS

- The secondary barrier must have a construction that, at a minimum, keeps the cargo liquid away from the surroundings for at least 15 days and maintains its full function at static lurch of 30.
- All cargo tanks on gas carriers are constructed to a given excess pressure and vacuum.
- The safety valve's maximum allowed set point, called MARVS, is stated in accordance to specification and pressure test, stated by the manufacturer of the cargo tank.
- The tolerance of vacuum on the cargo tanks is stated in bars, kg/cm2 or percentage of vacuum. MARVS and vacuum for each cargo tank must be specified in the vessels "Certificate of Fitness".
- US Coast Guard has more stringent rules for safety margins for pressure tanks than IMO, this indicates that cargo compartment on gas carriers have different MARVS pressures for IMO and USCG.

CARGO COMPARTMENT SYSTEMS

- In hold spaces and inter barrier spaces there are demands for an own bilge system that is independent from the vessel's other bilge systems.
- This is arranged with independent ejectors or bilge pumps in the spaces and usually one in each side of the space. Inter barrier space is the space between the cargo tank and the secondary barrier.
- The bilge arrangement is meant to pump out the cargo if there has been a leakage from the cargo tank.
- The system can also be utilized to remove water from the hold space or inter barrier space if there is accumulation of condensed water.
- If we have to pump water we must be sure that all connections to the loading system is disconnected.

CARGO COMPARTMENT SYSTEMS

- On atmospheric pressure tankers, hold space and inter barrier space must at all times have a neutral atmosphere, either by dry inert or nitrogen when loaded with flammable cargo.
- Nitrogen or dry air must be utilized when the cargo content is Ammonia or nonflammable cargo.
- When the cargo is Ammonia one must under no circumstance utilize inert containing CO2 in the spaces, because Ammonia has a reaction on CO2 and form a material called Ammonium Carbamate.

CARGO COMPARTMENT SYSTEMS

IMO divides the cargo tanks into 4 main groups:

Integrated tanks

Membrane tanks

Semi - Membrane tanks

Independent tanks, type A, B, and C

The characteristics of integrated, membrane and semi membrane tanks is that they all transfer static stress in the form of tank pressure to the hull around the cargo tank when this is loaded. Independent tanks only transfer the weight of the cargo tank and the cargo to the hull fundamentals, but does not transfer static pressure.

CARGO COMPARTMENT SYSTEMS

- **INTEGRATED TANKS**
- The first cargo compartment system we will look at is **integrated cargo tanks**.
- It is the same type of cargo compartment that we have on oil tankers, OBO carriers and product tankers.
- The cargo tank is an integrated part of the hull so the hull absorbs the weight and pressure from the cargo.
- This type of cargo compartment is less suited and rarely approved for gas transportation. If we transport cargo colder than –10C, this type of cargo compartment is not approved.
- Then low temperature steel in the cargo compartment is required. International rules also require a minimum distance from the ship's side to the cargo tank of 760 mm for guiding of toxic or flammable cargo.
- This prevents pollution from collision or run grounding.

CARGO COMPARTMENT SYSTEMS

- **Membrane Tanks**
- Membrane compartment are divided into two groups, membrane tank system and semi- membrane tank system.
- Membrane tank system is built up with two equal membranes, while semi-membrane system have a membrane against the cargo and metal or veneer as secondary barrier.
- Common for all membrane tanks is that there is no center bulkhead for reducing the free liquid surface but is built up with a trunk for narrowing the tanks up against the top of the tank. Membrane tank is a cargo tank built of thin plate of invar steel, stainless steel or ferro nickel steel with a content of 36% nickel. Characteristic for these types of steel is a very small thermal expansion coefficient approximate equal 0.
- The tank shell and the secondary barrier are built in profiles formed as a membrane; this renders the material thickness small and no more than 10 mm thick. The membrane thickness is normally of 0,5 to 1,2 mm.
- There is insulation between the secondary membrane and the hull.
- The insulation is often perlite filled in plywood boxes, placed outside each other like building blocks, or polyurethane gradually sprayed directly on as the tank is built up.

CARGO COMPARTMENT SYSTEMS

- **Membrane Tanks**
- The hull takes up all weight from the cargo, and the membrane takes up the thermal expansion.
- Normal excess pressure for such cargo tanks is 0,25 bars, and there are demands for secondary barrier.
- We can utilize the hull as secondary barrier for cargo temperatures down to –55C,but we must utilize low temperature steel in the hull round the cargo tank. Frequently ballast tanks or cofferdams form the hull structure around the cargo tank.
- For cargo colder than –55oC a tank must be placed into the insulation as secondary barrier.
- French Gaz-Transport patent utilize two identical membranes outside each other as primary and secondary barriers, with 36% nickel steel or invar steel.
- The insulation in Gaz-Transport patent is perlite filled with plywood boxes.

CARGO COMPARTMENT SYSTEMS

- Membrane Tanks:
- Technigaz membrane system utilizes stainless steel in the main membrane and veneer in the secondary membrane.
- The main membrane is welded together of small plates by a special shaping so that the tank tolerates expansion, the plate thickness is about 1,2 mm.
- The first tanks from Technigaz utilized veneer plates, as secondary barrier and balsa as insulation.
- Polyester-coated aluminium foil is now utilized as secondary barrier, and polyurethane foam for insulation.
- These tank types are utilized on large LNG and LPG tankers.

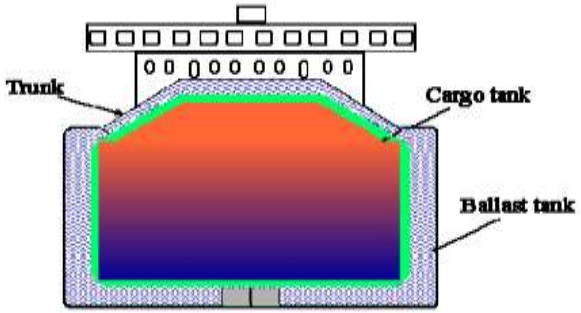

CARGO COMPARTMENT SYSTEMS

- Membrane Tanks

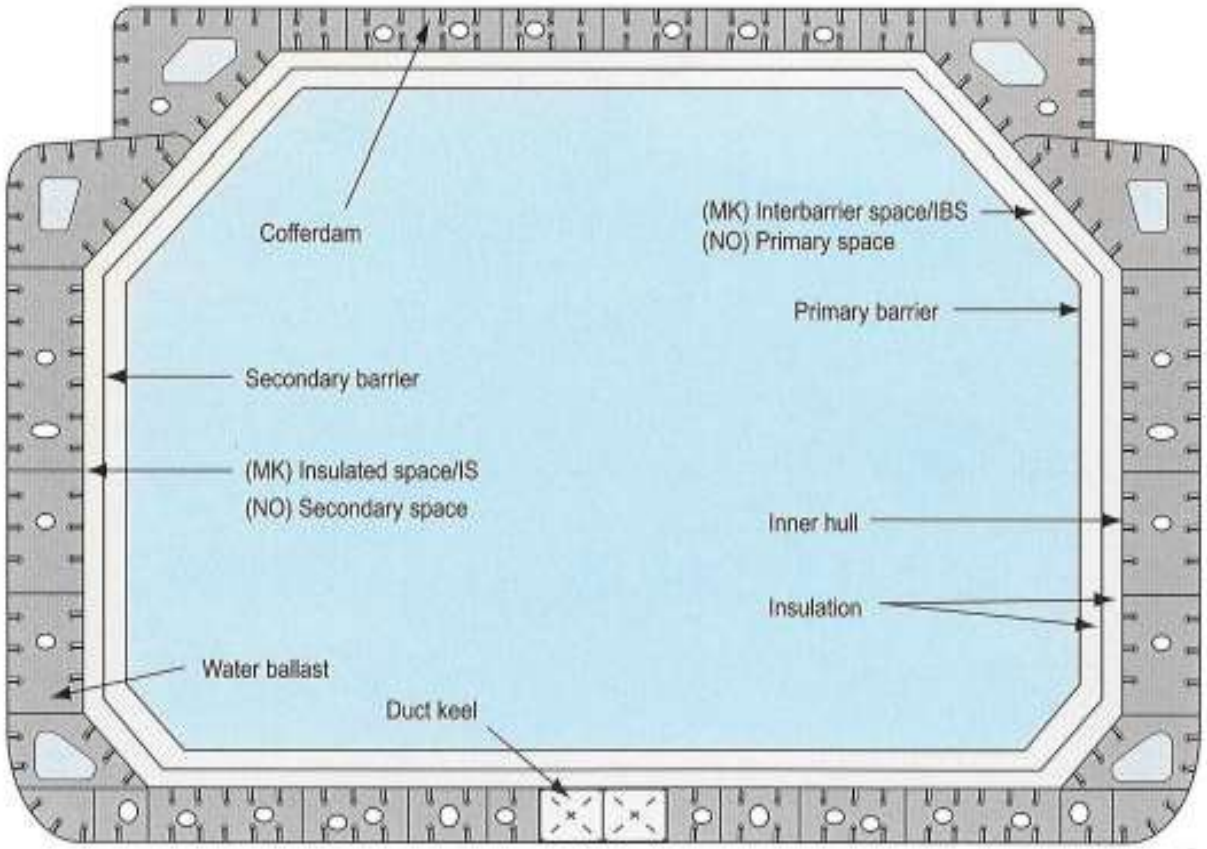

CARGO COMPARTMENT SYSTEMS

- **SEMI - MEMBRANE TANKS**
- These are tanks used on large LPG tankers.
- **Semi-membrane tanks** are built up with an inner tank, insulation, membrane and insulation against hull.
- It is the membrane that takes up the thermal expansion.
- The tanks are built of aluminium, ferro nickel steel with 36% nickel, or built of stainless steel.
- The insulation is mostly perlite but can also be polyurethane or polystyrene.
- The hull absorbs all dynamic loads from the cargo tank when the tank is loaded.
- Normal excess pressure for such cargo tanks is 0,25 bars, and there is a demand for secondary barrier.

CARGO COMPARTMENT SYSTEMS

- **SEMI - MEMBRANE TANKS**
- One can use the hull as secondary barrier for cargo temperature down to –55C, but one must utilize low temperature steel in the hull around the cargo tank.
- One can also place a tank into the insulation as secondary barrier.
- One cannot utilize the hull as secondary barrier for temperature colder than

  -55C.
- A membrane inside is then built in the insulation as secondary barrier.
- This tank type was designed for LPG transportation, but no LPG tankers are built with this tank type.
- In recent years, Japanese yards have started to utilize this tank type on large LPG tankers.

CARGO COMPARTMENT SYSTEMS

- **INDEPENDENT TANKS**
- Independent cargo compartment is cargo tanks that do not transfer the pressure loads to the hull when they are loaded.
- Therefore, only the tank weight is transferred to the cradles or the support points in the hull.
- The cargo tanks are built with support to prevent the tank from slipping forward, astern, to the side or floating up.
- **Independent tanks** are divided into three types: A, B and C. This division distinguishes between the pressure the tank must tolerate and the demands for secondary barrier.
- **Independent tank Type A** has the weakest strength of the independent tanks, and there are demands for full secondary barrier.
- **Independent tank type B** has greater strength than type A does, and only demands a partly secondary barrier.
- **Independent tank type C** is a pressure tank with no demands for secondary barrier.

CARGO COMPARTMENT SYSTEMS

- Main cargo containment systems

		Containment System				
		Type A Prismatic 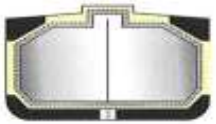	Type B Prismatic (SPB) 	Type B Spherical (Moss) 	Type C 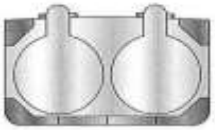	Membrane 
Characteristics	Benefits	• Very robust • centreline bulkhead prevents sloshing	• Very robust • centreline bulkhead prevents sloshing	• Very robust • design prevents sloshing • partial secondary barrier • no partial filling limitations • no free surface effect	• Single hull construction acceptable • very robust • centreline bulkhead prevents sloshing • no secondary barrier required	• Extensive experience for LNG carriers • typically low boil-off rate (BOR)
	Limitations	• Requires an independent secondary barrier	• Limited number of shipyards licensed to fabricate	• Less cargo capacity for same physical size of ship • height of tanks affects forward visibility from wheelhouse	• Less attractive for very large capacities (cost/weight) • less space efficient	• Limited impact resistance • full width tanks prone to sloshing • partial filling restrictions unless reinforcements applied

CARGO COMPARTMENT SYSTEMS

- **Independent tanks type A**
- Independent tank type A could be a prismatic tank and built in 3,5% nickel steel, coal manganese steel or aluminium.
- The material is a recognized standard, steel quality approved by the class companies. This type of cargo tank is utilized for carrying LNG, LPG and ammonium.
- This type of tanks is built for excess pressure less than 0,7 bars. Normal operating pressure is 0,25 bars.
- The cargo tanks are mounted on building blocks so the tank can expand freely. On top of the tanks and in the ship side or up under deck, brackets are welded to prevent the tank from floating up.
- A full secondary barrier for this type of tank is required. On LPG tankers designed for minimum temperature of –48C, the hull is generally used as secondary barrier as low temperature steel is used in the hull construction around the cargo tank.
- If the hull is not utilized as secondary barrier an extra tank around the main cargo tank are constructed. This is done by building a tank of veneer plates around the cargo tank with polyurethane foam as insulation in between. One can also use nitrogen or inert between the tanks as insulation.

CARGO COMPARTMENT SYSTEMS

- **Independent tanks type A**

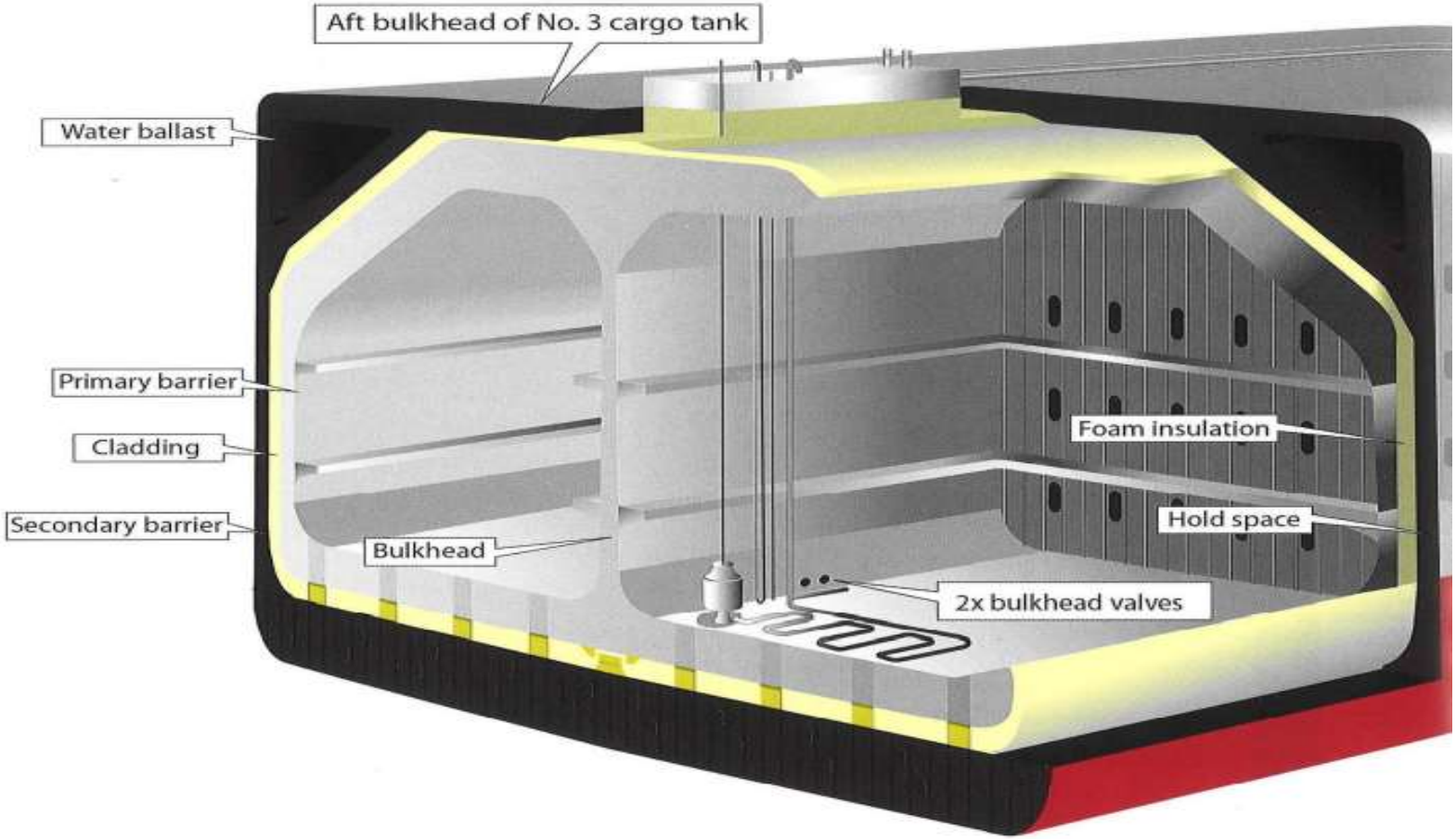

CARGO COMPARTMENT SYSTEMS

- **Independent tanks type B**
- Independent tank type B is a **prismatic tank, spherical tank** or membrane tank.
- These tanks are designed, and model tested, and they have better quality than type A tanks.
- This tank type is used for large LPG and medium-sized tankers. Prismatic tanks are produced in aluminium or 3% nickel steel in stiff plates.
- The tanks rest on reinforced plywood supports for free expansion.
- The tanks are normally provided with centerline bulkhead to reduce the free liquid surface.
- The tanks are insulated with polyurethane or perlite. Submerged pumps or deepwell pumps are utilized as discharging pumps.
- Spherical tanks produced by Moss-Rosenberg patent are produced in aluminium or 9% nickel steel.
- The tanks are supported with cargo tank shirt at equator and down to the hull. Around the tank that is above deck there is a waterproof cover.

CARGO COMPARTMENT SYSTEMS

- **Independent tanks type B**
- Around the tank that is above deck there is a waterproof cover.
- The tanks are equipped with submerged pumps.
- Polyurethane is often utilized as foam on type B tanks as insulation; this is sprayed directly on the tank shell.
- Other types of insulation are polystyrene plates placed in layers, or perlite either filler around the tank or placed in small veneer cases.
- The insulation on spherical tanks is spined on from the bottom and up.

CARGO COMPARTMENT SYSTEMS

- **Self-Supporting Spherical Type B – LNG Carrier**

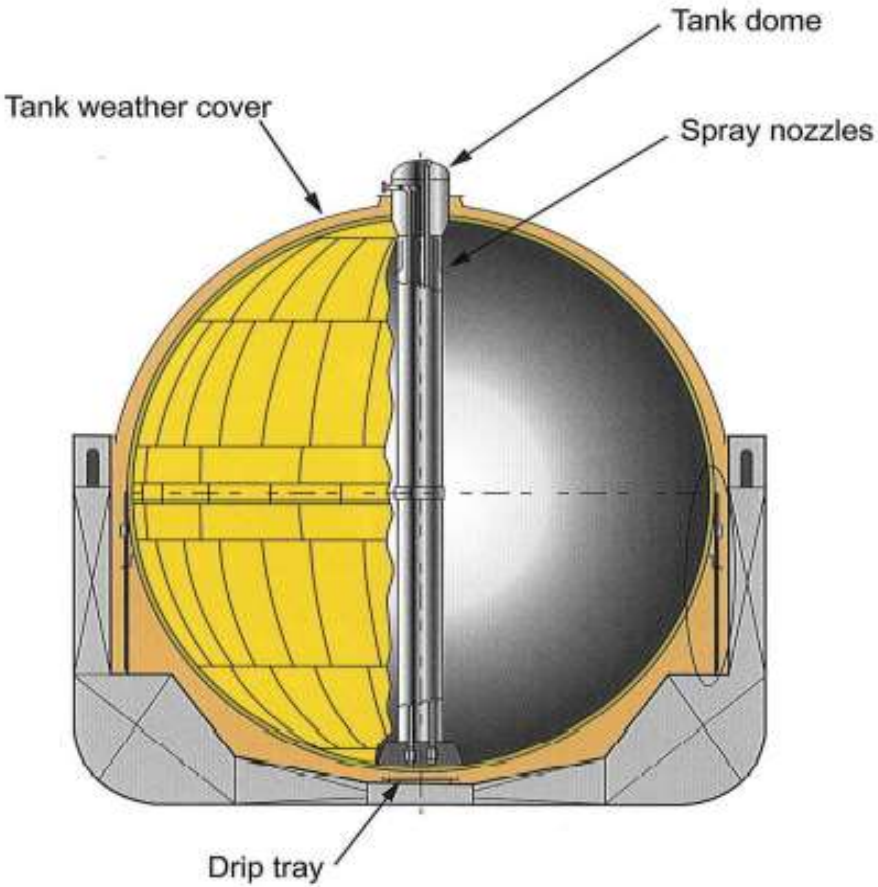

CARGO COMPARTMENT SYSTEMS

- **Independent tanks type C**
- Independent tanks, type C are either spherical tanks or cylinder tanks.
- The tanks are built in carbon manganese steel, 2 – 5 % nickel steel or acid-proof stainless steel.
- This type of tank has a large rate of security, and therefore does not need secondary barrier.
- This tank type is utilized for fully pressurized gas carriers and semi-pressurized gas carriers.
- Tanks type C utilized on gas carriers are built in sizes from 300 m3 to 2500 m3.
- Either submerged or deepwell pumps are utilized as discharge pumps.
- The tanks are stored on cradles and welded to one of the cradles.
- The other cradle functions as a support for the tank to expand freely.
- Some patents keep the tanks down in the cradles by steel bands that are extended over the tank and fastened to the cradle.

CARGO COMPARTMENT SYSTEMS

- **Independent tanks type C**
- Another patent is to weld “anti float” brackets on top of the cargo tank and up under deck to prevent the tank from floating up.
- Tanks designed for cargo colder than –10oC must have insulation.
- Normally polyurethane or polystyrene is utilized as insulation.
- The insulation is either sprayed directly or placed on in blocks on the cargo tank.
- The thickness of the insulation is dependent of the quality of the insulation material and the temperature of the cargo.
- The thickness of the insulation on tanks that carry ethylene is about 200 mm.

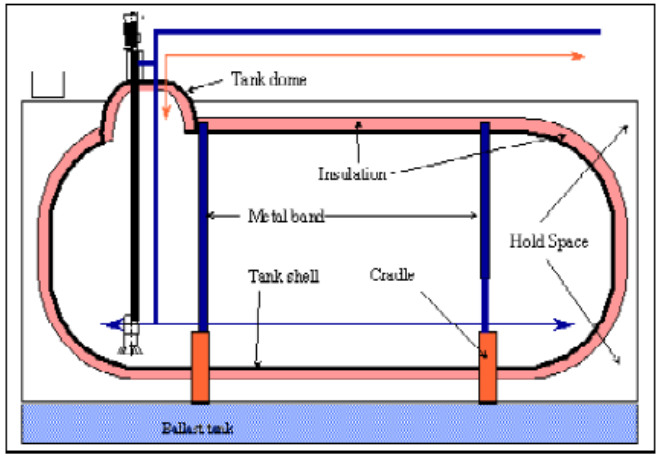

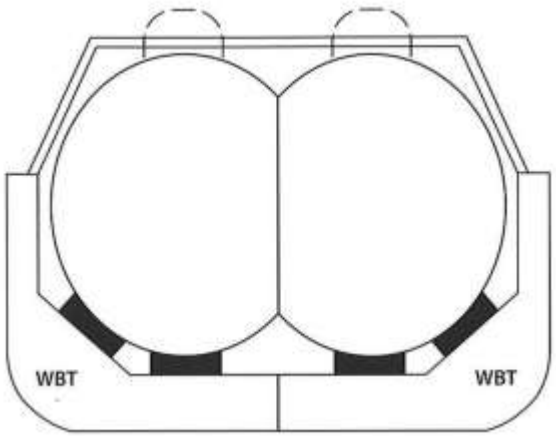

Cargo Handling Equipment

- Centrifugal pumps are utilized as main unloading pumps on gas tankers.
- The unloading pumps are located down in the cargo tank's swamp or as close to the tank bottom as possible. This is because the centrifugal pumps do not suck and are thereby dependent upon good drainage.
- The pumps are either the deepwell pump type, submerged type or booster pump.
- Normally, the number of revolutions on deepwell and submerged pumps lie on 1300 – 1800 RPM.
- Pumps driven with hydraulics have the advantage that the number of revolutions can be adjusted.
- Electrically driven pumps normally have a stated number of revolutions, but lately they are delivered with a variable number of revolutions, for example 1370/800 RPM.
- Booster pumps normally have revolutions from 3500 – 4000 RPM. It is very important to follow the user manual supplied by the pump manufacturer to ensure what to do before we start a pump, and what routines to follow at overhaul and inspection of the pumps.

Cargo Handling Equipment – Deepwell Pump

- Deepwell pump is the pump type that is often used on gas tankers.
- Deepwell pumps are pumps with a long shaft between the driving motor and the pump.
- The shaft goes inside the tank's discharge pipe from the pump up to the tank dome. The discharge pipe is a solid pipe that goes up through the tank and out to the flange on the tank dome to the liquid line.
- The discharge pipe is constructed with several lengths with pipes, and there is a shaft bearing on each flange.
- The bearings are lubricated and cooled down by the liquid that is pumped from the tank. It is very important not to run the pump without liquid. This may result in damage of bearings and then the shaft.
- The motor that drives the pump is either electric or hydraulic. There is a mechanical sealing device between the motor and the discharge pipe in the cargo tank.

Cargo Handling Equipment – Deepwell Pump

- Typical Deepwell Pump

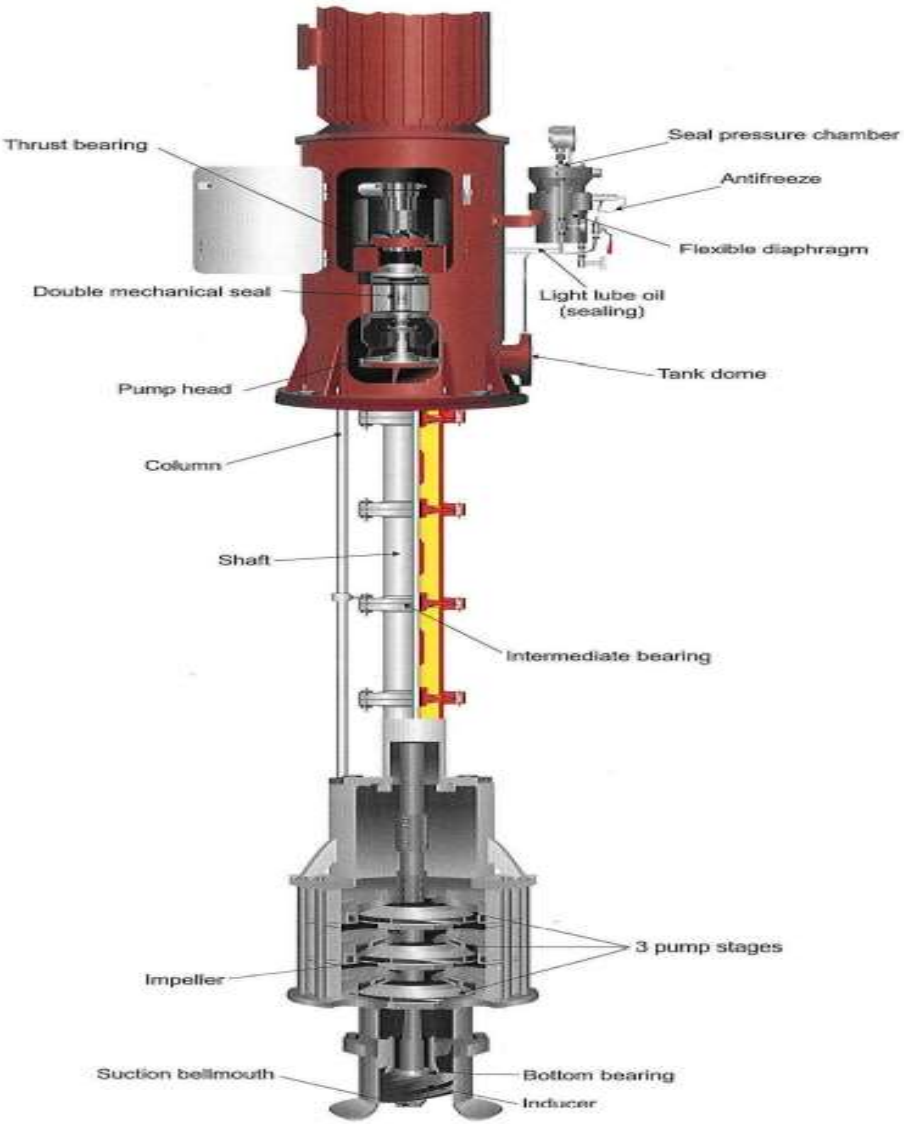

Cargo Handling Equipment – Submerged Pump

- Submerged pumps are multistage centrifugal pumps that are often used as discharge pumps on large LNG and LPG tankers. The motor and pump are submerged down in the tank sump or as close to the tank bottom as possible.
- The motor is connected directly to the pump with a short shaft on this type of pump.
- The liquid that is pumped lubricates and cools the pump's bearings. It is therefore essential that the pump is used only when there is liquid in the tank. The liquid is pumped up through the tank's discharge pipe and up to the liquid line.
- This type of pump is equipped with electrical motor. The cables to the electric motor are either made of copper or stainless steel. If copper is used in the cable, the cables must be sheathed with stainless steel to prevent damage on the cable from corrosive cargoes.
- The discharge pipe is the steering pipe for the pump. At the bottom of the discharge pipe it is a non-return valve that opens when pump is lowered and shut when the pump is taken up. Before opening the discharge pipe it must be gas freed, this is done either with inert gas or Nitrogen.

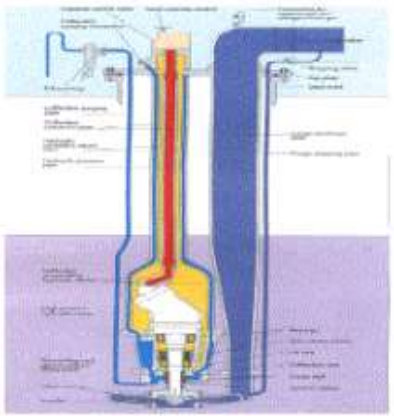

Cargo Handling Equipment – Submerged Pump

- Typical Submerged Motor Pump

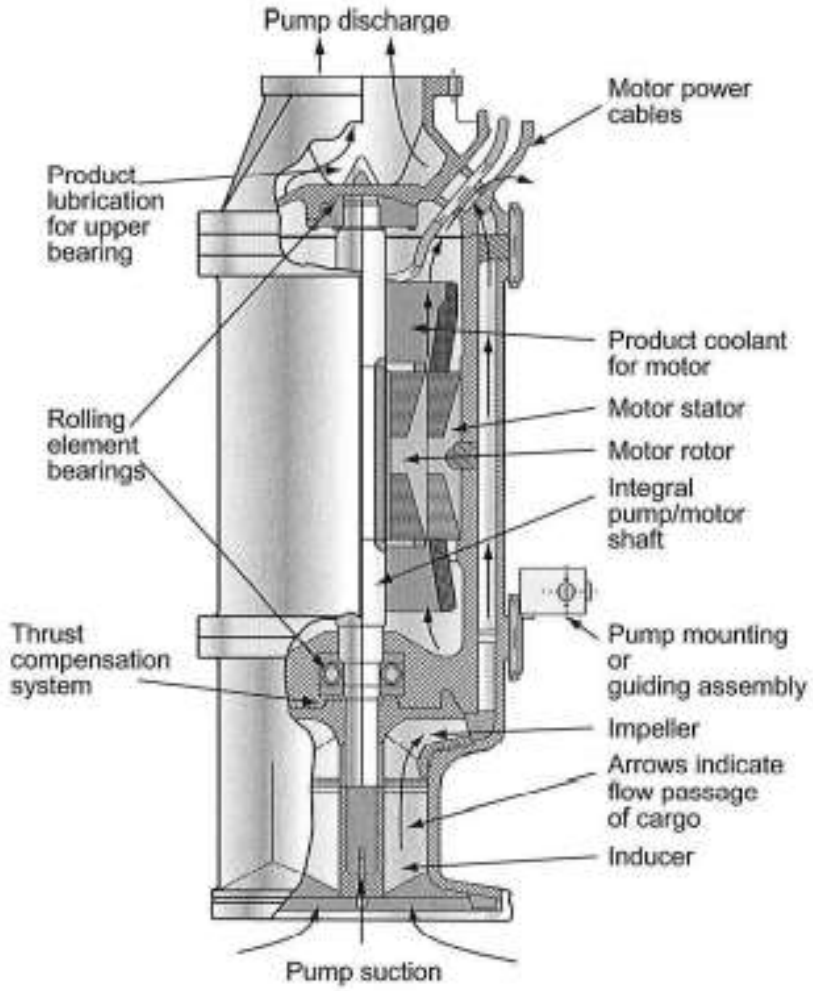

Cargo Handling Equipment – Booster Pump

- Booster pumps mentioned here are auxiliary pumps for cargo handling. The pump is one-staged centrifugal pump and is often installed on deck near the pipe manifold.
- The booster pumps on gas tankers are used either as a main discharge pump, auxiliary discharge pump, deck tank supply pump or heater feed pump.
- The booster pumps are driven with electric or hydraulic motor.
- It is important that the booster pumps are blended off on LPG/LEG tankers when carrying cargo with lower temperature than –50o C. Booster pumps are rarely designed for temperature lower than –50o C.

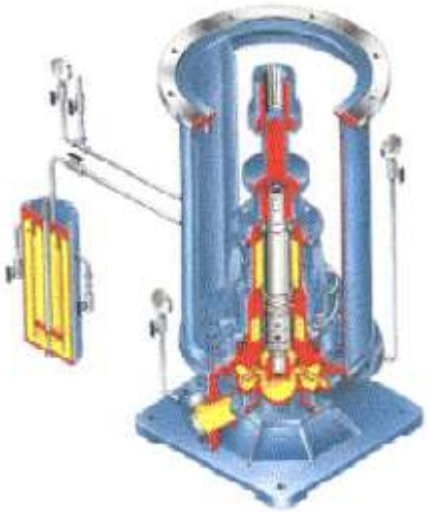

Cargo Handling Equipment – Reliquefaction

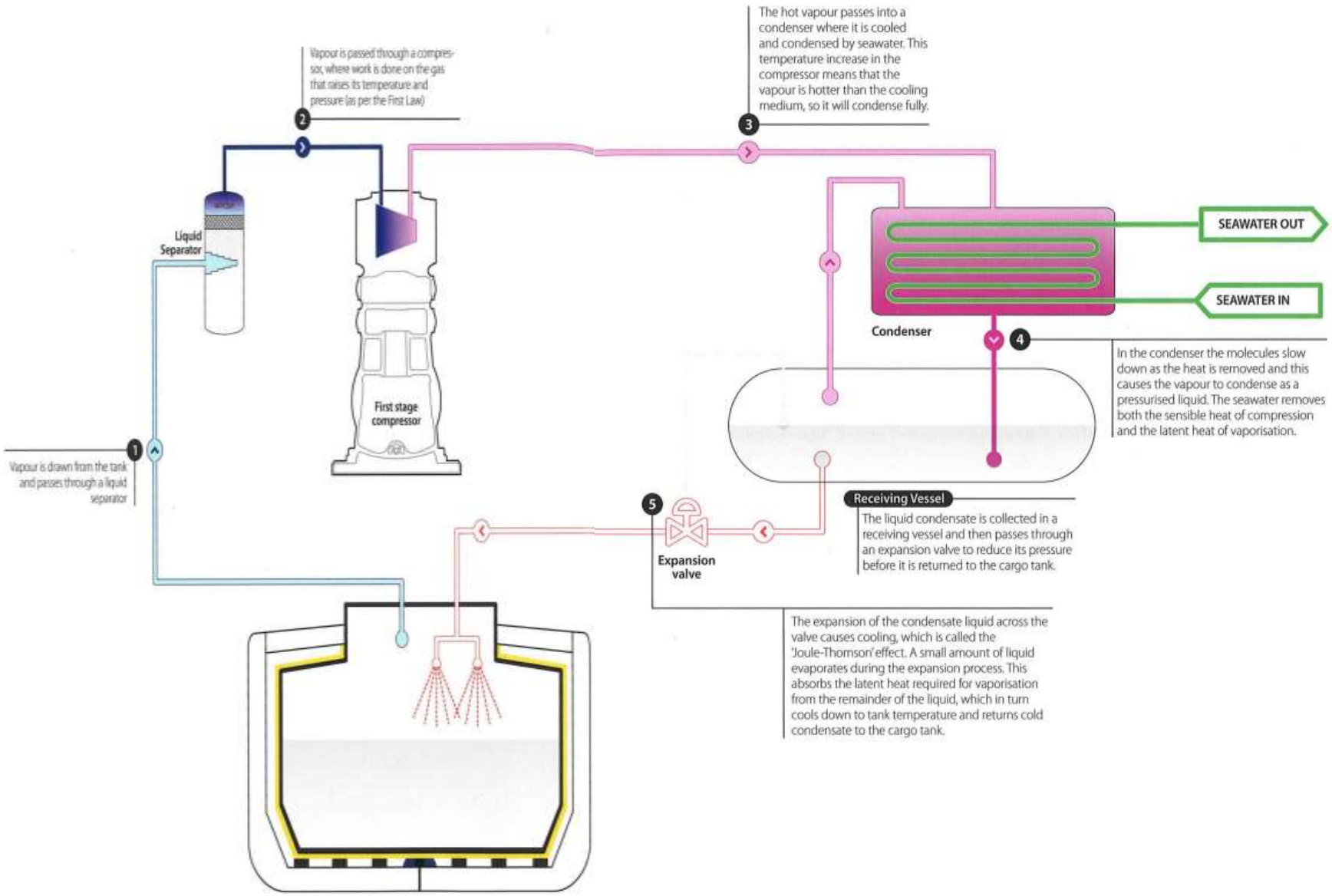

Cargo Handling Equipment – Reliquefaction

- 1. Vapor is drawn from the tank and passes through a liquid separator.
- 2. Vapor is passed through a compressor, where work is done on the gas that raises its temperature and pressure (as per the First Law).
- 3. The hot vapor passes into a condenser where it is cooled and condensed by seawater. This temperature increase in the compressor means that the vapor is hotter than the cooling medium, so it will condense fully.
- 4. In the condenser the molecules slow down as the heat is removed and this causes the vapor to condense as a pressurized liquid. The seawater removes both the sensible heat of compression and the latent heat of vaporization.
- 4a. The liquid condensate is collected in a receiving vessel and then passes through an expansion valve to reduce its pressure before it is returned to the cargo tank.
- 5. The expansion of t he condensate liquid across the valve causes cooling, which is called the 'Joule-Thomson' effect. A small amount of liquid evaporates during the expansion process. This absorbs the latent heat required for vaporization from the remainder of the liquid, which in turn cools down to tank temperature and returns cold condensate to the cargo tank.

Cargo Handling Equipment – Reliquefaction

- Typical Cargo Compressor
- In the 'Burckhardt' oil-free compressor, sealing between the piston and cylinder wall, and between the piston rod and gland, is achieved by the use of machined labyrinths. Consequently, n
- No lubrication is needed for those spaces in the compressor that are swept by cargo vapors.
- The absence of any contact at the seals limits wear and lubricating oil consumption is minimal.
- The oil-free side of the compressor and the lubricated crank are separated by oil scraper rings mounted on the piston rod
- The rod also carries a ring that prevents any residual oil film from creeping up the rod.
- The distance between the crank and gland is such that the oily part of the piston rod cannot enter the oil-free gland. If any gas leaks through the gland it is returned to the suction side.
- The crankcase and separation space are kept under suction pressure.
- Where the crankshaft leaves the case it is fitted with a shaft seal operating in oil.

Cargo Handling Equipment – Reliquefaction

- Typical Cargo Compressor

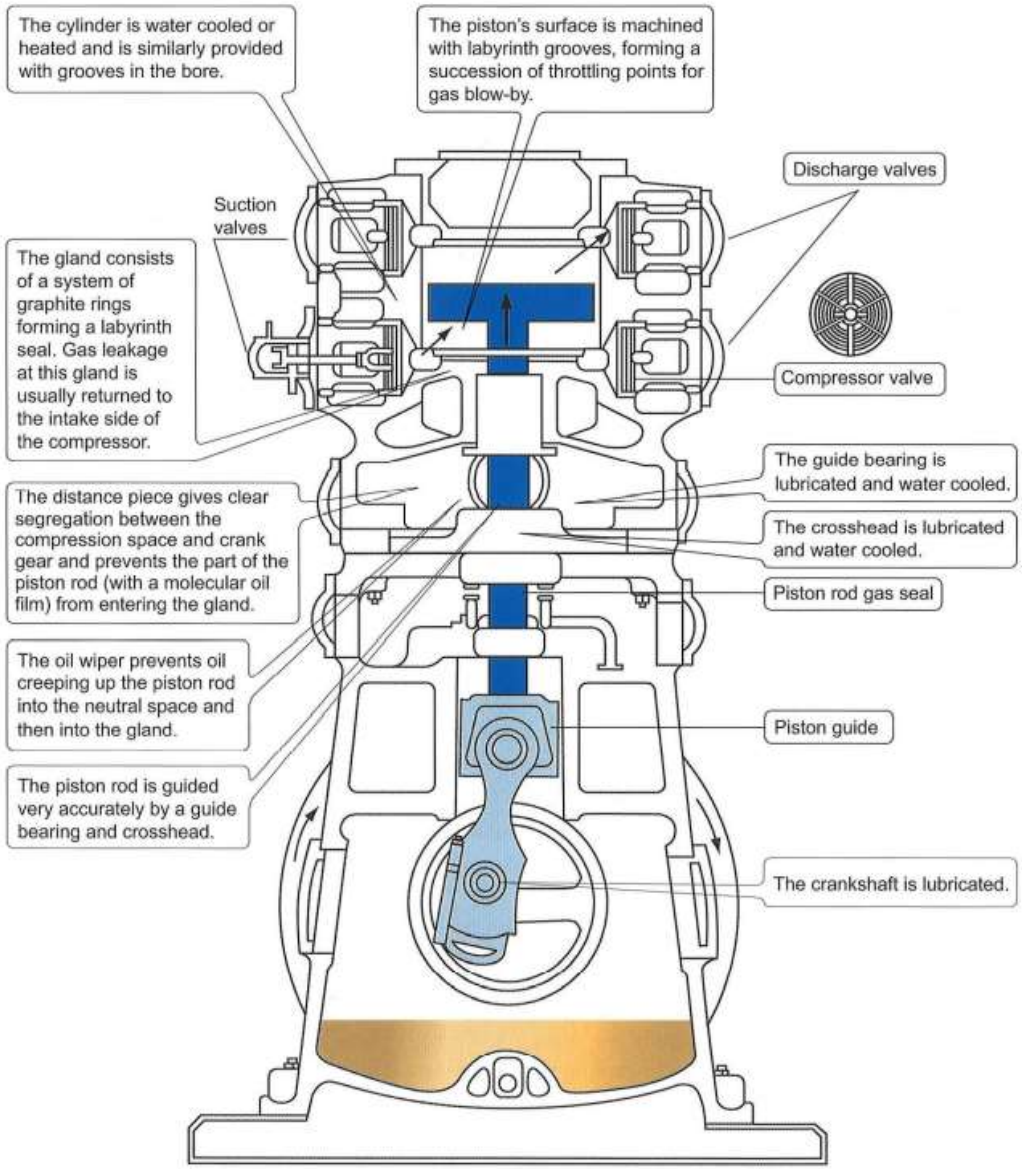

Cargo Handling Equipment – Reliquefaction

- Typical Compressor Room Arrangement

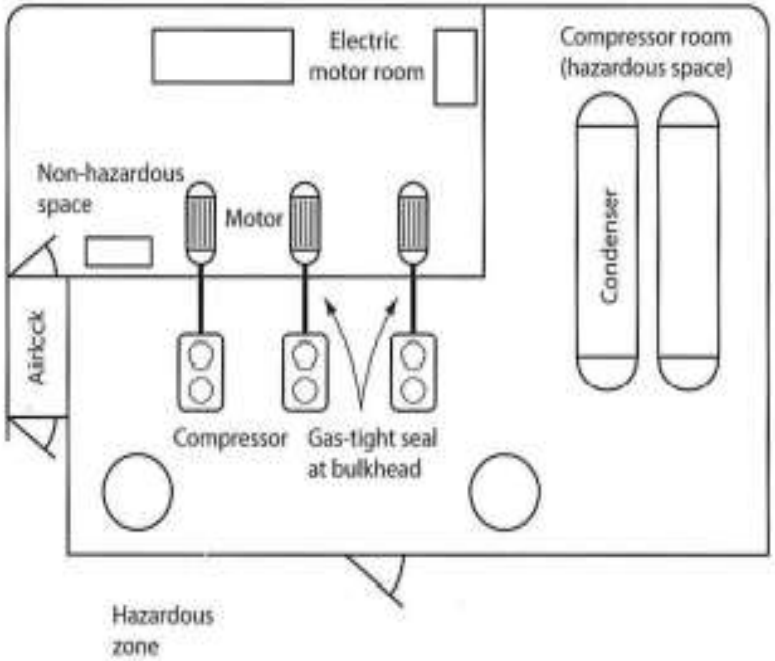

Cargo Handling Equipment – Reliquefaction

- Typical Compressor Room Arrangement

LPG Sequence of Operations

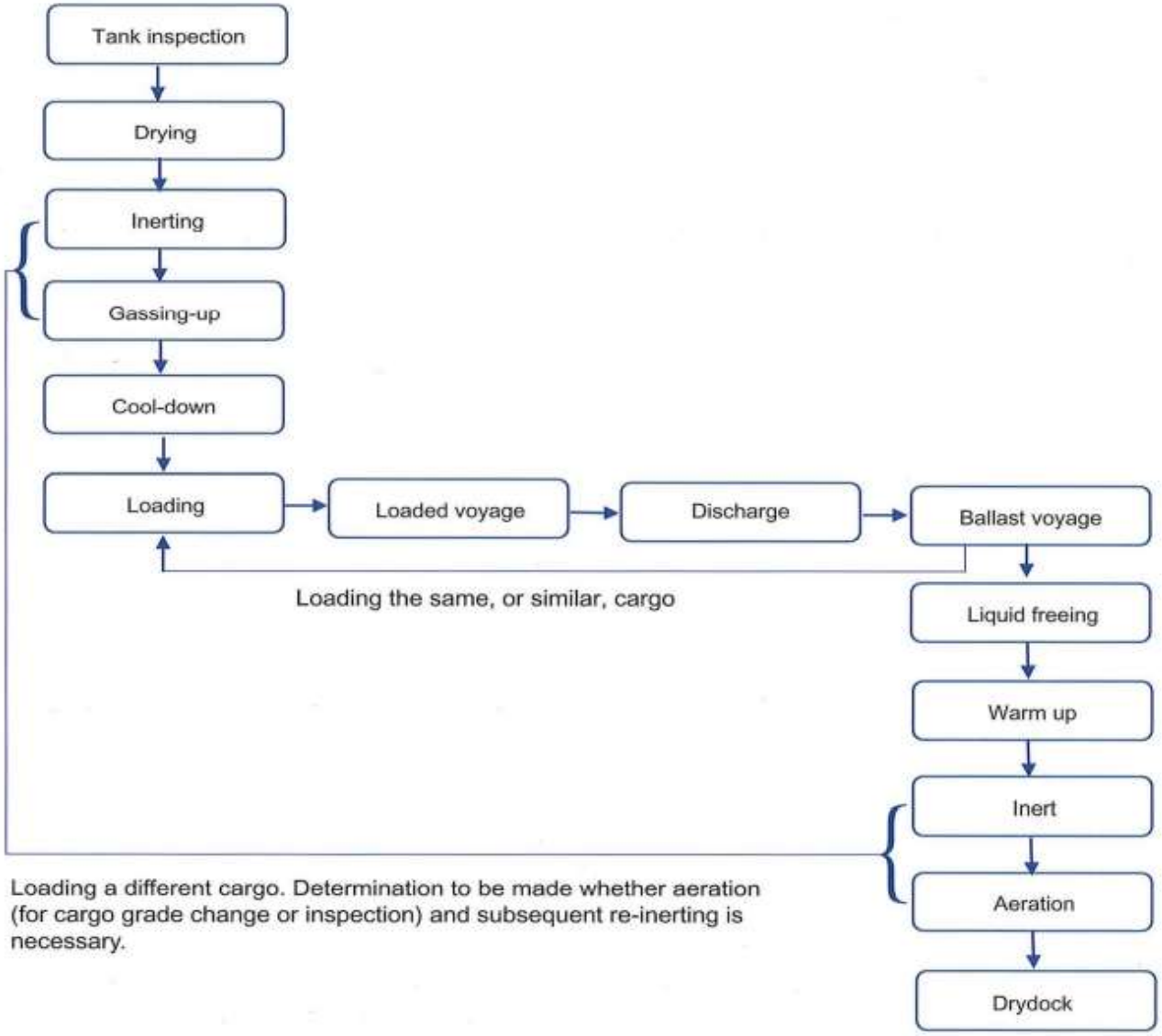

Questions ?

Thank you!

- Presented by:
- Capt.Georgios Papadopoulos
- Dimitris Angelakos